Tube cover BLine Select VX01

BLine Select VX01 cover satin round 3000mm for VT01
Article no.: 170409



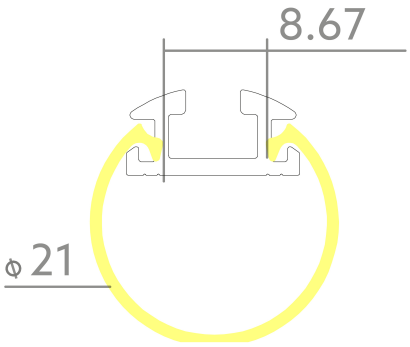

21 mm	66 %	21 mm
Covering width	Bore/transmittance	Net height

TENDER TEXT

cover VT satinised round 240x240° 66% PMMA, D 21 x L 3000 mm BILTON LEDON Technology Tube cover BLine Select VX01 Article 170409 The Tube cover BLine Select VX01 cover can be combined with all profiles from the VT family. The cover consists of Kunststoff and has a satiniert finish with a transmittance degree of 66 %. Dimension (L x W x H): 3000.0 mm x 21.0 mm x Please note that cutting tolerances of +/- 2mm may occur.

© BILTON LEDON Technology | www.better-light.at
Gewerbepark Harham 2, 5760 Saalfelden | Austria | Phone: +43 6582 71164 | Mail: office@bltechnology.at
Version: 20261125 | Errors and printing errors are reserved.

Tube cover BLine Select VX01

BLine Select VX01 cover satin round 3000mm for VT01
Article no.: 170409

MECHANICAL DATA

Material	Kunststoff
Width [mm]	21.0
Length [mm]	3000.0
Covering width [mm]	21
Colour	White
Model	Lengthwise cover
Suitable for	sonstige
Inflammability class of insulation material acc. with UL94	HB
Surfacetreatment	satiniert

TEMPERATURE TECHNICAL DATA

Ambient/storage temperature [°C]	+ 10 ... + 50
Thermal conductivity	70
Bore/transmittance [%]	66

PACKAGING INFORMATION

EAN	4250716913552
Article no.	170409
Net weight [g]	97.5
Gross weight [g]	97.5
Gross width [mm]	21.0
Gross height [mm]	21.0
Gross length [mm]	3000.0
Customs tariff number	94054231
Net width [mm]	21.0
Net height [mm]	21
Net length [mm]	3000
State of origin	DE

SAFETY INFORMATION: Read the safety and installation instructions carefully and completely before commissioning. The operating instructions can be found at: www.better-light.at

DISCLAIMER OF WARRANTY: The technical information corresponds to the status at the time of printing and have been worked out to the best of our knowledge. However, errors and printing errors are reserved. Make sure that you always use the latest version of the data sheets. The latest data sheet can be found at: www.better-light.at

© BILTON LEDON Technology | www.better-light.at
Gewerbepark Harham 2, 5760 Saalfelden | Austria | Phone: +43 6582 71164 | Mail: office@bltechnology.at
Version: 20261125 | Errors and printing errors are reserved.