Suspended profile BLine Select VT01

Bline Select VT01 LED suspension profile alu silver 19 W/m W12.7xH6.3x3000mm
Article no.: 170299



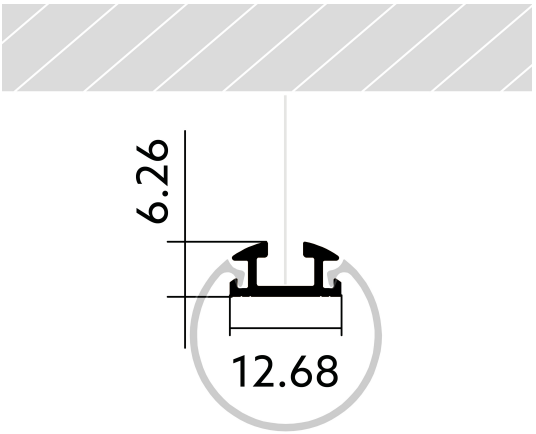

Aluminium	19 W	6.3 mm	12.7 mm
Material	Power consumption	Height	Width

TENDER TEXT

Suspension profile VT01 aluminum silver 19W/m L3000xW12.7xH6.3mm BILTON LEDON Technology Suspended profile BLine Select VT01 Article 170299 The Suspended profile BLine Select VT01 can be combined with all covers from the VT family. The profile is made of Aluminium with an finish and has a power consumption of up to 19 W. Dimensions (L x W x H): 3000.0 mm x 12.7 mm x 6.3 mm Please note that cutting tolerances of +/- 2mm may occur.

© BILTON LEDON Technology | www.better-light.at
Gewerbepark Harham 2, 5760 Saalfelden | Austria | Phone: +43 6582 71164 | Mail: office@bltechnology.at
Version: 20261123 | Errors and printing errors are reserved.

Suspended profile BLine Select VT01

Bline Select VT01 LED suspension profile alu silver 19 W/m W12.7xH6.3x3000mm
Article no.: 170299

MECHANICAL DATA

Material	Aluminium
Width [mm]	12.7
Length [mm]	3000.0
Height [mm]	6.3
Mounting method	sonstige
Colour	lichtgrau
Power consumption [W]	19
Material quality	sonstige
Surfacetreatment	anodisiert / eloxiert

TEMPERATURE TECHNICAL DATA

Power consumption [W]	19
Thermal conductivity	23.4

PACKAGING INFORMATION

EAN	4250716913125
Article no.	170299
Net weight [g]	133.5
Gross weight [g]	133.5
Gross width [mm]	12.7
Gross height [mm]	6.3
Gross length [mm]	3000.0
Customs tariff number	94054239
Net width [mm]	12.7
Net height [mm]	6.3
Net length [mm]	3000
State of origin	DE

NECESSARY ACCESSORIES

Article	Article no.
Endcap VT001	**170445**
Clip ALU VTC1	**170446**
Angle ALU YTC8	**170469**
Nut Connector YTV1	**170471**

SAFETY INFORMATION: Read the safety and installation instructions carefully and completely before commissioning. The operating instructions can be found at: www.better-light.at

DISCLAIMER OF WARRANTY: The technical information corresponds to the status at the time of printing and have been worked out to the best of our knowledge. However, errors and printing errors are reserved. Make sure that you always use the latest version of the data sheets. The latest data sheet can

Suspended profile BLine Select VT01

Bline Select VT01 LED suspension profile alu silver 19 W/m W12.7xH6.3x3000mm
Article no.: 170299

be found at: www.better-light.at

© BILTON LEDON Technology | www.better-light.at
Gewerbepark Harham 2, 5760 Saalfelden | Austria | Phone: +43 6582 71164 | Mail: office@bltechnology.at
Version: 20261123 | Errors and printing errors are reserved.