Lense asymmetrical BLine Select CX06

BLine Select CX06 Linear lens asymmetrical 6000 mm for CT series
Article no.: 170392



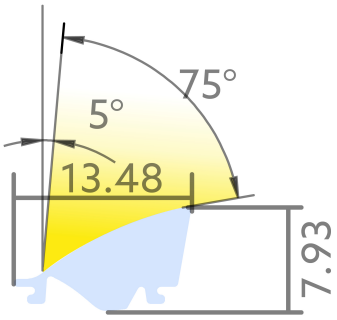

13.5 mm	86 %	8 mm
Covering width	Bore/transmittance	Net height

TENDER TEXT

Linear lens CT asymmetrical 80x5° 86% PMMA L6000xW13.5xH8mm BILTON LEDON Technology Lense asymmetrical BLine Select CX06 Article 170392 The Lense asymmetrical BLine Select CX06 cover can be combined with all profiles from the CT family. The cover consists of Kunststoff and has a transparent finish with a transmittance degree of 86 %. Dimension (L x W x H): 6000.0 mm x 13.5 mm x 8 mm Please note that cutting tolerances of +/- 2mm may occur.

© BILTON LEDON Technology | www.better-light.at
Gewerbepark Harham 2, 5760 Saalfelden | Austria | Phone: +43 6582 71164 | Mail: office@bltechnology.at
Version: 20261125 | Errors and printing errors are reserved.

Lense asymmetrical BLine Select CX06

BLine Select CX06 Linear lens asymmetrical 6000 mm for CT series
Article no.: 170392

MECHANICAL DATA

Material	Kunststoff
Width [mm]	13.5
Length [mm]	6000.0
Covering width [mm]	13.5
Colour	ohne
Model	Lengthwise cover
Suitable for	U - Profil
Inflammability class of insulation material acc. with UL94	HB
Surfacetreatment	transparent

TEMPERATURE TECHNICAL DATA

Ambient/storage temperature [°C]	+ 10 ... + 50
Thermal conductivity	70
Bore/transmittance [%]	86

PACKAGING INFORMATION

EAN	4250716913477
Article no.	170392
Net weight [g]	195
Gross weight [g]	195
Gross width [mm]	13.5
Gross height [mm]	8.0
Gross length [mm]	6000.0
Customs tariff number	94054231
Net width [mm]	13.5
Net height [mm]	8
Net length [mm]	6000
State of origin	DE

SAFETY INFORMATION: Read the safety and installation instructions carefully and completely before commissioning. The operating instructions can be found at: www.better-light.at

DISCLAIMER OF WARRANTY: The technical information corresponds to the status at the time of printing and have been worked out to the best of our knowledge. However, errors and printing errors are reserved. Make sure that you always use the latest version of the data sheets. The latest data sheet can be found at: www.better-light.at

© BILTON LEDON Technology | www.better-light.at
Gewerbepark Harham 2, 5760 Saalfelden | Austria | Phone: +43 6582 71164 | Mail: office@bltechnology.at
Version: 20261125 | Errors and printing errors are reserved.