Lense symmetrical BLine Select CX05

BLine Select CX05 Linear lens symmetrical 6000 mm for CT series
Article no.: 170388



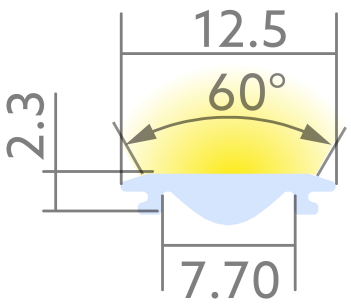

12.5 mm	83 %	2.3 mm
Covering width	Bore/transmittance	Net height

TENDER TEXT

Linear lens CT symmetrical 60x60° 83% PMMA L6000xW12.5xH2.3mm BILTON LEDON Technology Lense symmetrical BLine Select CX05 Article 170388 The Lense symmetrical BLine Select CX05 cover can be combined with all profiles from the CT family. The cover consists of Kunststoff and has a transparent finish with a transmittance degree of 83 %. Dimension (L x W x H): 6000.0 mm x 12.5 mm x 2.3 mm Please note that cutting tolerances of +/- 2mm may occur.

© BILTON LEDON Technology | www.better-light.at
Gewerbepark Harham 2, 5760 Saalfelden | Austria | Phone: +43 6582 71164 | Mail: office@bltechnology.at
Version: 20261123 | Errors and printing errors are reserved.

Lense symmetrical BLine Select CX05

BLine Select CX05 Linear lens symmetrical 6000 mm for CT series
Article no.: 170388

MECHANICAL DATA

Material	Kunststoff
Width [mm]	12.5
Length [mm]	6000.0
Covering width [mm]	12.5
Colour	ohne
Model	Lengthwise cover
Suitable for	U - Profil
Inflammability class of insulation material acc. with UL94	HB
Surfacetreatment	transparent

TEMPERATURE TECHNICAL DATA

Ambient/storage temperature [°C]	+ 10 ... + 50
Thermal conductivity	70
Bore/transmittance [%]	83

PACKAGING INFORMATION

EAN	4250716913507
Article no.	170388
Net weight [g]	81
Gross weight [g]	81
Gross width [mm]	12.5
Gross height [mm]	2.3
Gross length [mm]	6000.0
Customs tariff number	94054231
Net width [mm]	12.5
Net height [mm]	2.3
Net length [mm]	6000
State of origin	DE

SAFETY INFORMATION: Read the safety and installation instructions carefully and completely before commissioning. The operating instructions can be found at: www.better-light.at

DISCLAIMER OF WARRANTY: The technical information corresponds to the status at the time of printing and have been worked out to the best of our knowledge. However, errors and printing errors are reserved. Make sure that you always use the latest version of the data sheets. The latest data sheet can be found at: www.better-light.at

© BILTON LEDON Technology | www.better-light.at
Gewerbepark Harham 2, 5760 Saalfelden | Austria | Phone: +43 6582 71164 | Mail: office@bltechnology.at
Version: 20261123 | Errors and printing errors are reserved.