Recessed profile BLine Select CT01

BLine Select CT01 Recessed LED profile alu silver 10 W/m W18xH5.4xL6000 mm
Article no.: 170276



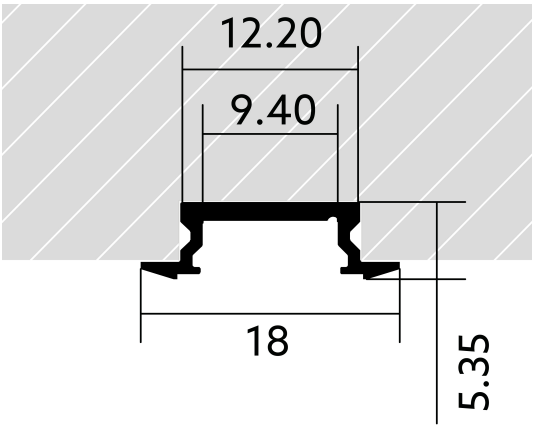

Aluminium	10 W	5.3 mm	18.0 mm
Material	Power consumption	Height	Width

TENDER TEXT

Recessed profile CT01 aluminum silver 10W/m L6000xW18xH5.4mm BILTON LEDON Technology Recessed profile BLine Select CT01 Article 170276 The Recessed profile BLine Select CT01 can be combined with all covers from the CT family. The profile is made of Aluminium with an finish and has a power consumption of up to 10 W. Dimensions (L x W x H): 6000.0 mm x 18.0 mm x 5.3 mm Please note that cutting tolerances of +/- 2mm may occur.

© BILTON LEDON Technology | www.better-light.at
Gewerbepark Harham 2, 5760 Saalfelden | Austria | Phone: +43 6582 71164 | Mail: office@bltechnology.at
Version: 20261125 | Errors and printing errors are reserved.

Recessed profile BLine Select CT01

BLine Select CT01 Recessed LED profile alu silver 10 W/m W18xH5.4xL6000 mm
Article no.: 170276

MECHANICAL DATA

Material	Aluminium
Width [mm]	18.0
Length [mm]	6000.0
Height [mm]	5.3
Mounting method	Einbau
Colour	lichtgrau
Power consumption [W]	10
Material quality	sonstige
Surfacetreatment	anodisiert / eloxiert

TEMPERATURE TECHNICAL DATA

Power consumption [W]	10
Thermal conductivity	23.4

PACKAGING INFORMATION

EAN	4250716912777
Article no.	170276
Net weight [g]	234
Gross weight [g]	234
Gross width [mm]	18.0
Gross height [mm]	5.4
Gross length [mm]	6000.0
Customs tariff number	94054239
Net width [mm]	18.0
Net height [mm]	5.4
Net length [mm]	6000
State of origin	DE

NECESSARY ACCESSORIES

Article	Article no.
Endcap CT00E-A	**170440**
Clip steel CTC5	**170442**
Magnet steel YTM5	**170470**

SAFETY INFORMATION: Read the safety and installation instructions carefully and completely before commissioning. The operating instructions can be found at: www.better-light.at

DISCLAIMER OF WARRANTY: The technical information corresponds to the status at the time of printing and have been worked out to the best of our knowledge. However, errors and printing errors are reserved. Make sure that you always use the latest version of the data sheets. The latest data sheet can be found at: www.better-light.at

© BILTON LEDON Technology | www.better-light.at
Gewerbepark Harham 2, 5760 Saalfelden | Austria | Phone: +43 6582 71164 | Mail: office@bltechnology.at
Version: 20261125 | Errors and printing errors are reserved.