# BL Wall Light R

**BL Wall Light Protected Outdoor light R250mm 1550lm 15W 120D 822/830/840 BK IP65**
Article no.: 770036



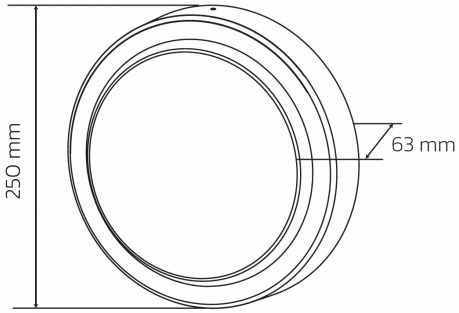


| black | nein | IK10 | IP65 |
|---|---|---|---|
| Colour housing | With movement sensor | Impact strength | Degree of protection (IP) |

## TENDER TEXT

Round outdoor wall light including power supply, black aluminum housing, 15W, 1550 lm, 2200/3000/4000 K switchable, CRI>80, 120°, dimensions: D250 x T63mm Article number 770036 LED wall luminaire made of Aluminium black with power supply unit - Yes , rated voltage 230 V AC ; cover made of Plastic Opal , protection class IP65 , service life of 50000 h , Luminous flux 1550 lm, Colour temperature 2200/3000/4000 K, Colour rendering >80 , Beam angle 120° Diameter 250 mm x Depth 63 mm

>80 | IP65 | 2200 / 3000 / 4000 K

© BILTON LEDON Technology | www.better-light.at
Gewerbepark Harham 2, 5760 Saalfelden | Austria | Phone: +43 6582 71164 | Mail: office@bltechnology.at
Version: 20261123 | Errors and printing errors are reserved.

# BL Wall Light R

**BL Wall Light Protected Outdoor light R250mm 1550lm 15W 120D 822/830/840 BK IP65**
Article no.: 770036

## MECHANICAL DATA

| | |
|---|---|
| Material housing | Aluminium |
| Colour housing | black |
| Width [mm] | 250.0 |
| Height [mm] | 250.0 |
| Diameter [mm] | 250 |
| With movement sensor | nein |
| Lamp type | LED nicht austauschbar |
| Material of the cover | Plastic Opal |
| Impact strength | IK10 |
| Degree of protection (IP) | IP65 |
| With lamp | Yes |
| Control gear included | Yes |

## ELECTRICAL DATA

| | |
|---|---|
| Voltage type | AC |
| Nominal voltage [V] | 230 |
| Overall efficiency [lm/W] | 103 |

## LIGHT TECHNICAL DATA

| | |
|---|---|
| Function | ohne |
| Beam angle [°] | 120 |
| Colour rendering index CRI | >80 |
| Rated luminous flux according to IEC 62722-2-1 [lm] | 1550 |
| Colour temperature [K] | 2200 / 3000 / 4000 |
| Colour of light | White |

## TEMPERATURE TECHNICAL DATA

| | |
|---|---|
| Impact strength | IK10 |
| Rated life time L80/B10 at 25 °C [h] | 50000 |

## PACKAGING INFORMATION

| | |
|---|---|
| EAN | 4250716953596 |
| Article no. | 770036 |
| Net weight [g] | 1050 |
| Gross weight [g] | 1350 |
| Customs tariff number | 94051190 |
| Net width [mm] | 250.0 |
| Net height [mm] | 250 |
| Net length [mm] | 63 |
| State of origin | CN |

© BILTON LEDON Technology | www.better-light.at
Gewerbepark Harham 2, 5760 Saalfelden | Austria | Phone: +43 6582 71164 | Mail: office@bltechnology.at
Version: 20261123 | Errors and printing errors are reserved.

# BL Wall Light R

**BL Wall Light Protected Outdoor light R250mm 1550lm 15W 120D 822/830/840 BK IP65**
Article no.: 770036

SAFETY INFORMATION: Read the safety and installation instructions carefully and completely before commissioning. The operating instructions can be found at: www.better-light.at

DISCLAIMER OF WARRANTY: The technical information corresponds to the status at the time of printing and have been worked out to the best of our knowledge. However, errors and printing errors are reserved. Make sure that you always use the latest version of the data sheets. The latest data sheet can be found at: www.better-light.at